VOLA S50, S50D, S50DH
VOLA KV3, KV4, KV9, KV10, KV15
VOLA HV5, HV8, HV10
VOLA SC2, SC4, SC6, SC8, SC11, SC13

Fitting instruction
Montageanleitung
Monteringsvejledning
Monteringsvägledning
Montage hanleiding
Manuel de montage

GODKENDT TIL DRIKKEVAND

04/00115
04/00307

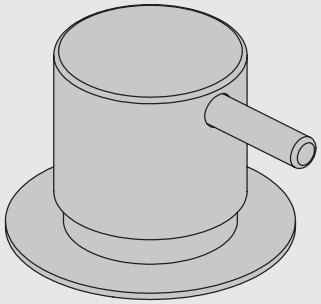

www.vola.com

vola

S50_V9_40999831
19-12-2023

5 703182 372372

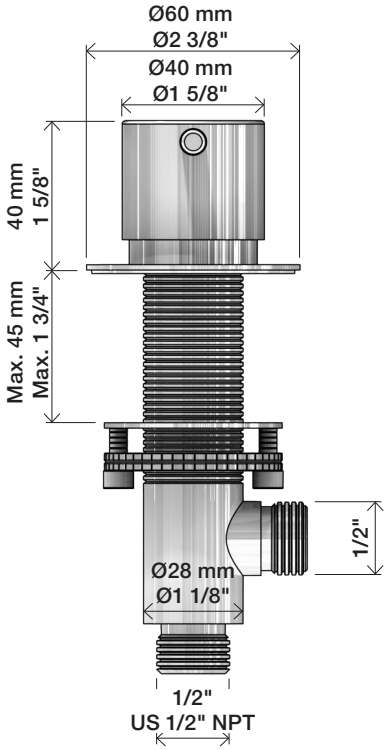

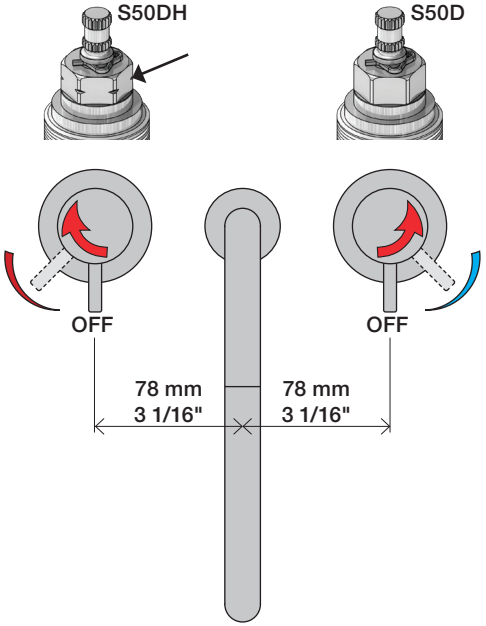

Data, 3 Bar/43.5 Psi:

	l/min.	Gal/min.
S50:	32,0	8.5
KV3:	30,0	7.9
KV4	9,0	2.4
KV10, 15:	9,0	2.4
HV5, 8, 10:	9,0	2.4
SC2, 4 (A24):	16,0	4.2
SC6, 8, 11, 13: (C)	26,0	6.9

Max. 65°C, 150°F

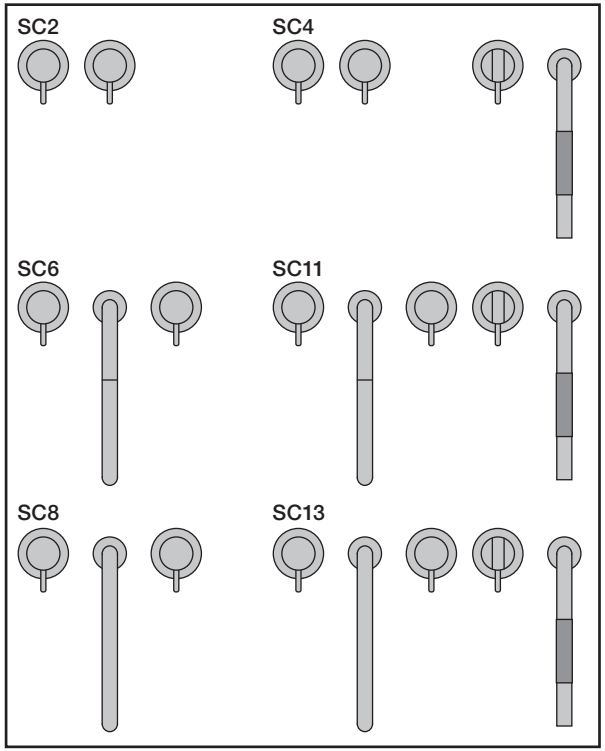

1

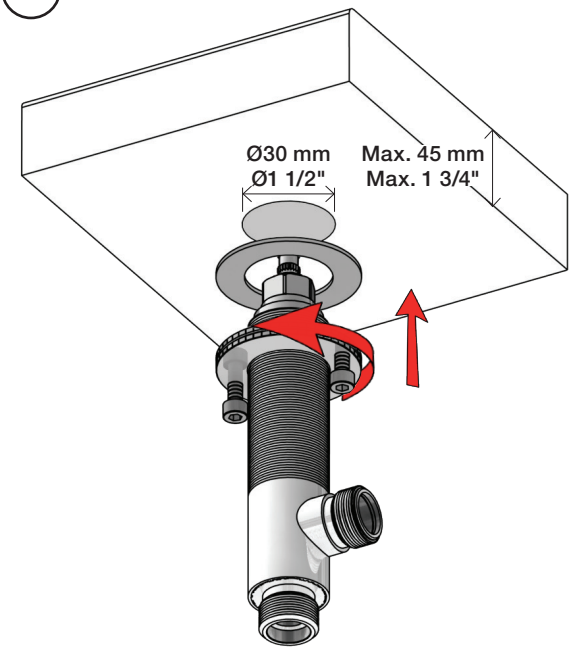

2

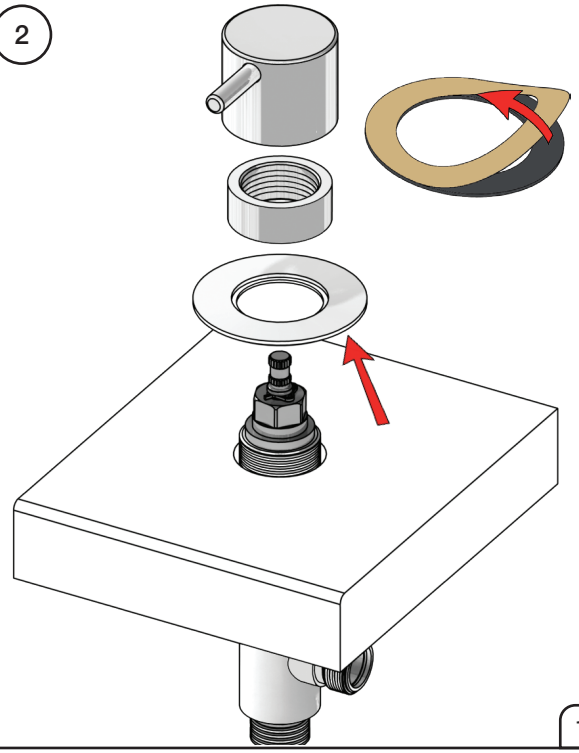

3

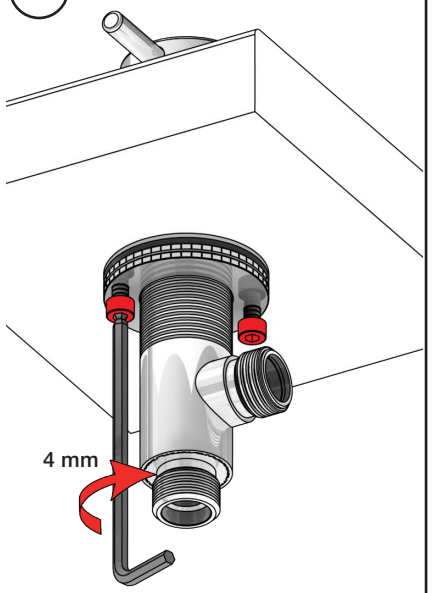

4

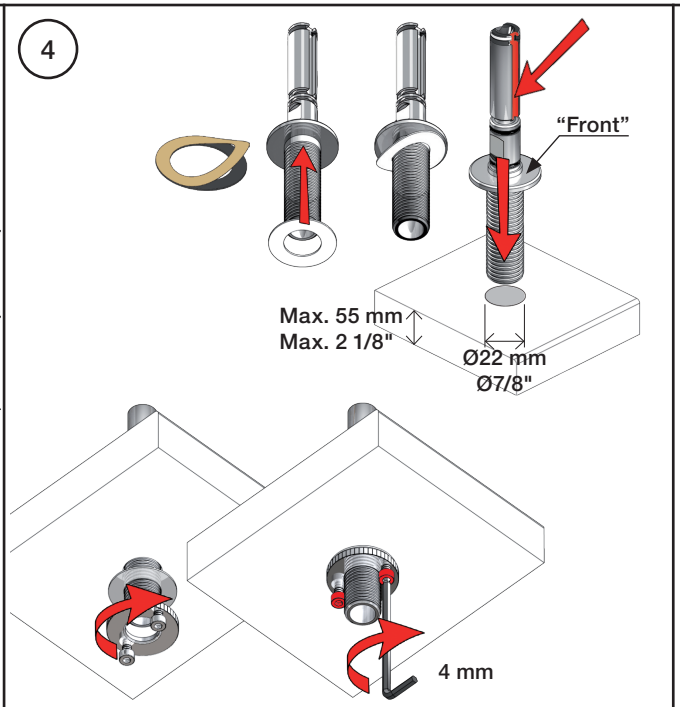

4A

mm:	H	D	h
090	210	200	145
090A	110	85	40
090B	185	100	114
090C	185	100	114
090D	220	200	130
090E	170	200	65
090G	185	140	105
090H	265	230	155
090I	325	230	216
090V	355	145	270

Inches:	H	D	h
090	8 1/2"	8"	5 3/4"
090A	4 1/4"	3 1/2"	1 1/2"
090B	7"	4"	4 1/2"
090C	7"	4"	4 1/2"
090D	8 3/4"	8"	5"
090E	6 3/4"	8"	2 1/2"
090G	7"	5 1/2"	4"
090H	10 1/2"	9"	6"
090I	12 3/4"	9"	8 1/2"
090V	14"	5 3/4"	10 1/2"

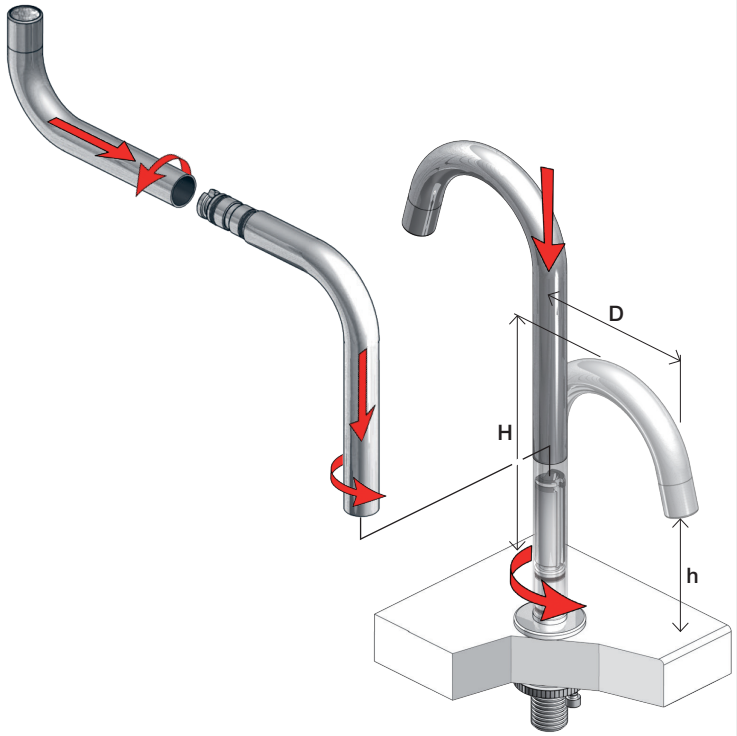

5

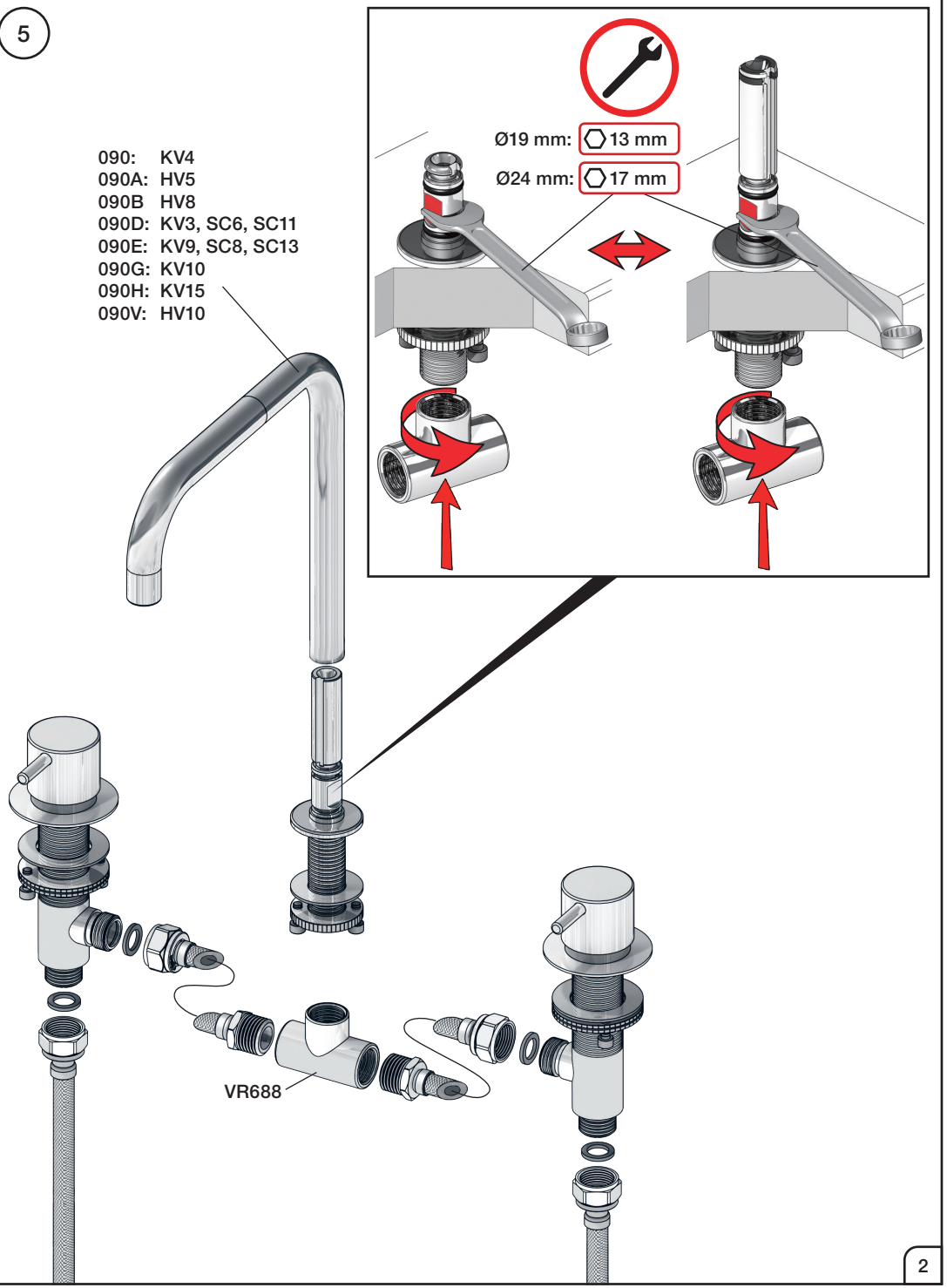

VOLA A/S • Lunavej 2 • DK-8700 Horsens • Tel. +45 7023 5500 • sales@vola.dk • www.vola.com

VOLA 090, 090A, 090B:
VOLA 090C, 090D, 090E:
VOLA 090G, 090H, 090I, 090V:

1 - 4

VOLA 090FM:

5

Fitting instruction
Montageanleitung
Monteringsvejledning

Monteringsvägledning
Montage hanleiding
Manuel de montage

GODKENDT
TIL DRIKKEVAND

04/00045
04/00109

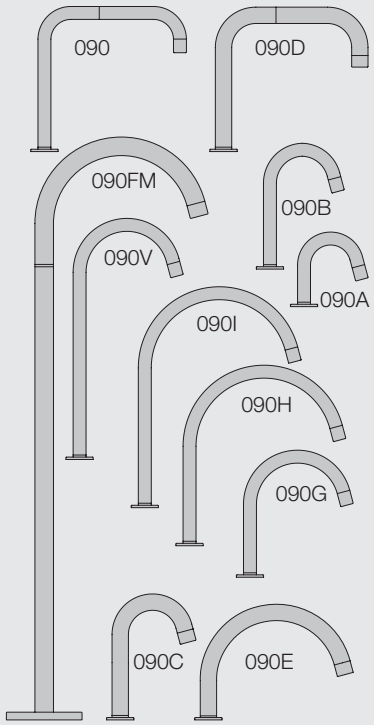

www.vola.com

vola

mnt_090_V4_40999824
21-11-2023

5 703182 372365

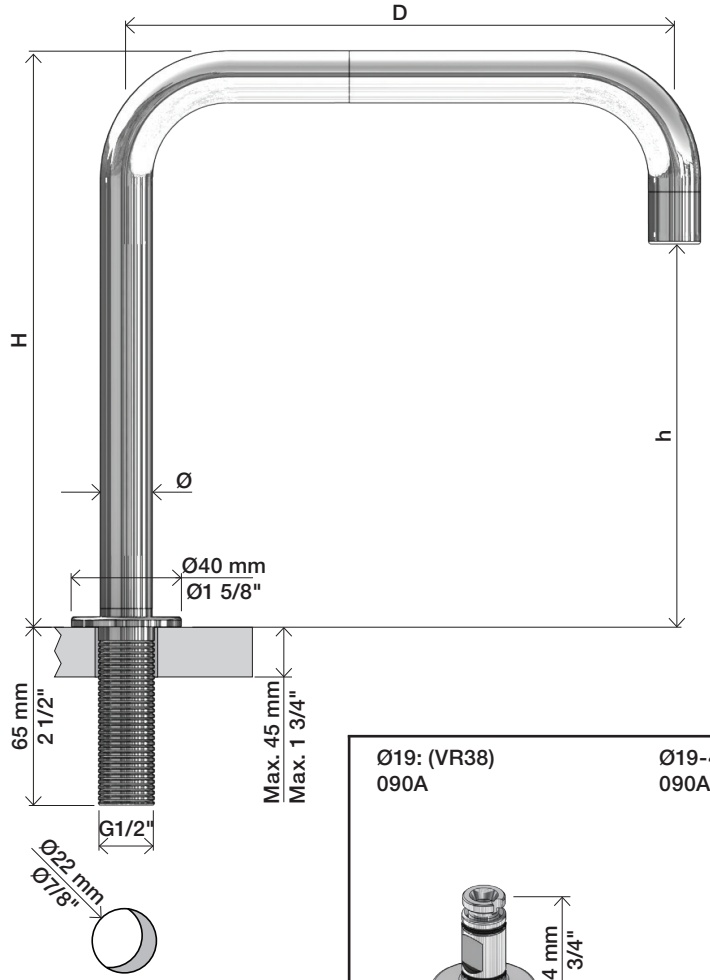

mm:	Ø	H	D	h
090	19	210	200	145
090A	19	110	85	40
090B	19	185	100	114
090C	24	185	100	114
090D	24	220	200	130
090E	24	170	200	65
090G	19	185	140	105
090H	19	265	220	155
090I	19	325	220	215
090V	19	355	145	270

Inches:	Ø	H	D	h
090	3/4"	8 1/4"	8"	5 3/4"
090A	3/4"	4 1/4"	3 1/2"	1 1/2"
090B	3/4"	7"	4"	4 1/2"
090C	1"	7"	4"	4 1/2"
090D	1"	8 3/4"	8"	5"
090E	1"	6 3/4"	8"	2 1/2"
090G	3/4"	7"	5 1/2"	4"
090H	3/4"	10 1/2"	8 5/8"	6"
090I	3/4"	12 3/4"	8 5/8"	8 1/2"
090V	3/4"	14"	5 3/4"	10 1/2"

Ø19: (VR38)
090A

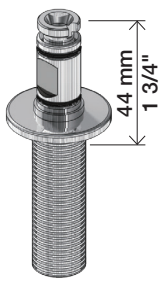

Ø19-40: (VR38A)
090A

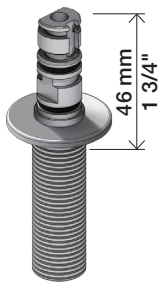

Ø19: (VR38L)
090
090B
090G
090H
090I
090V

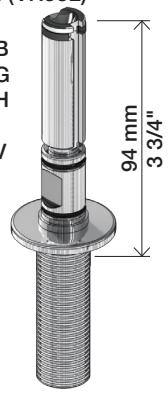

Ø19-40: (VR38)
090
090B
090G
090H
090I
090V

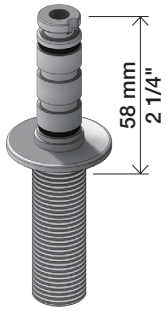

Ø24: (VR638)
090C
090D
090E

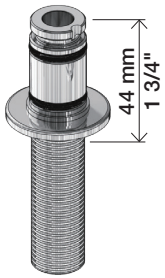

Ø24-40: (VR633)
090C
090D
090E

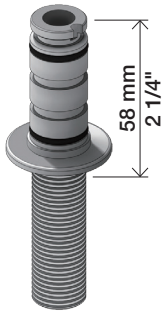

1

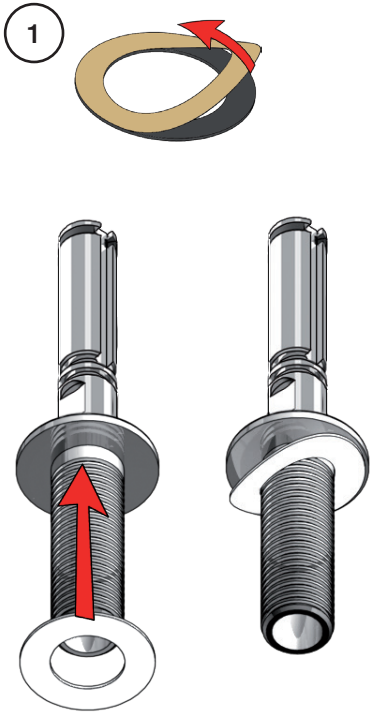

2

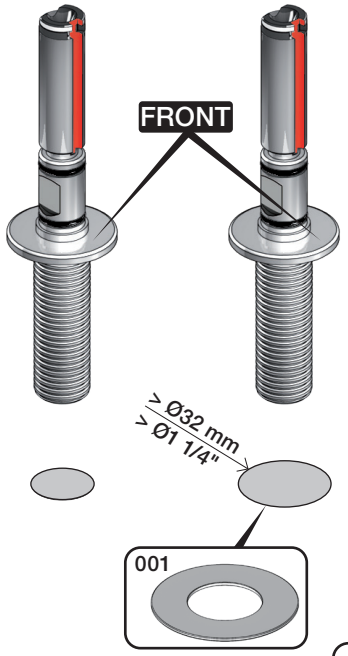

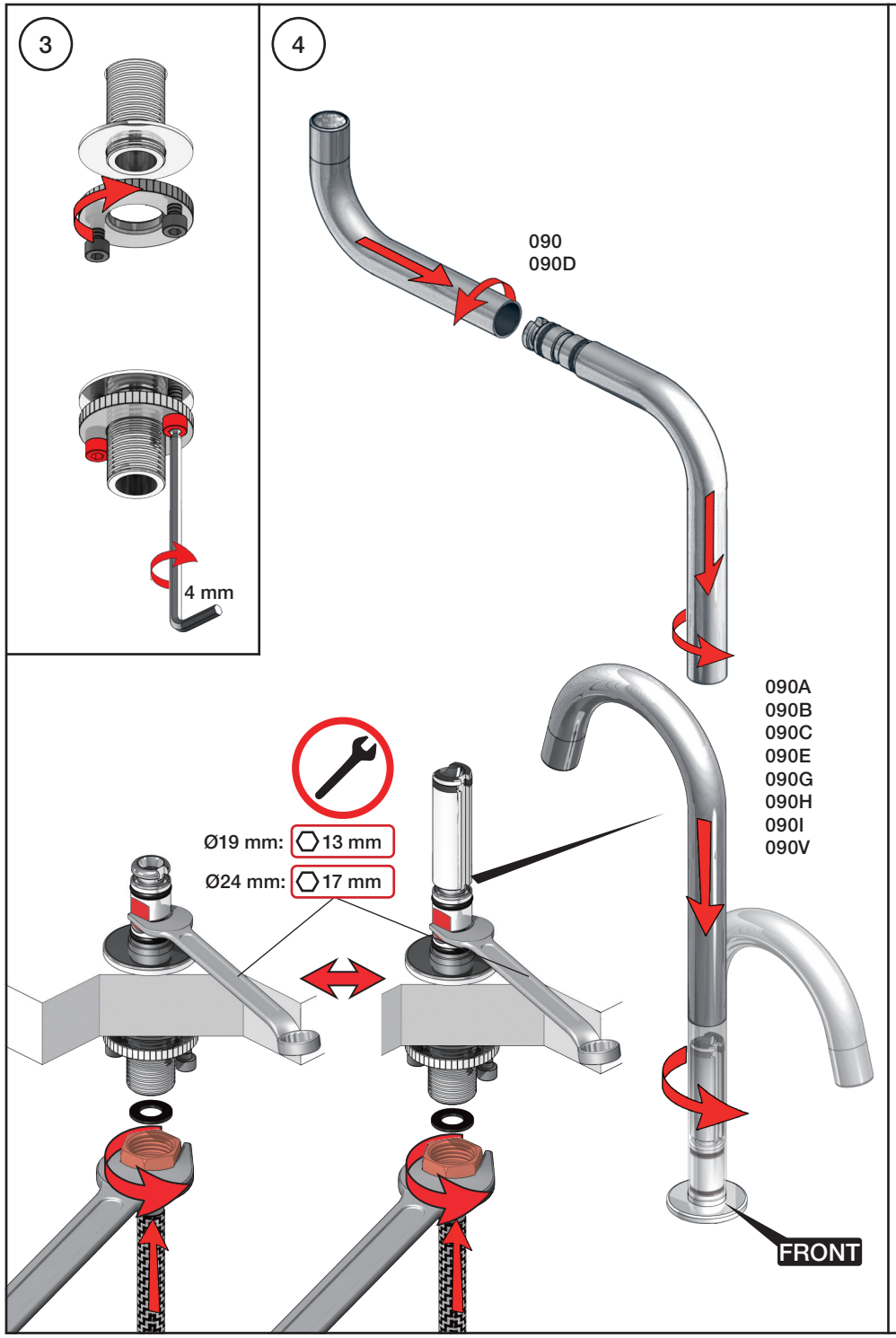

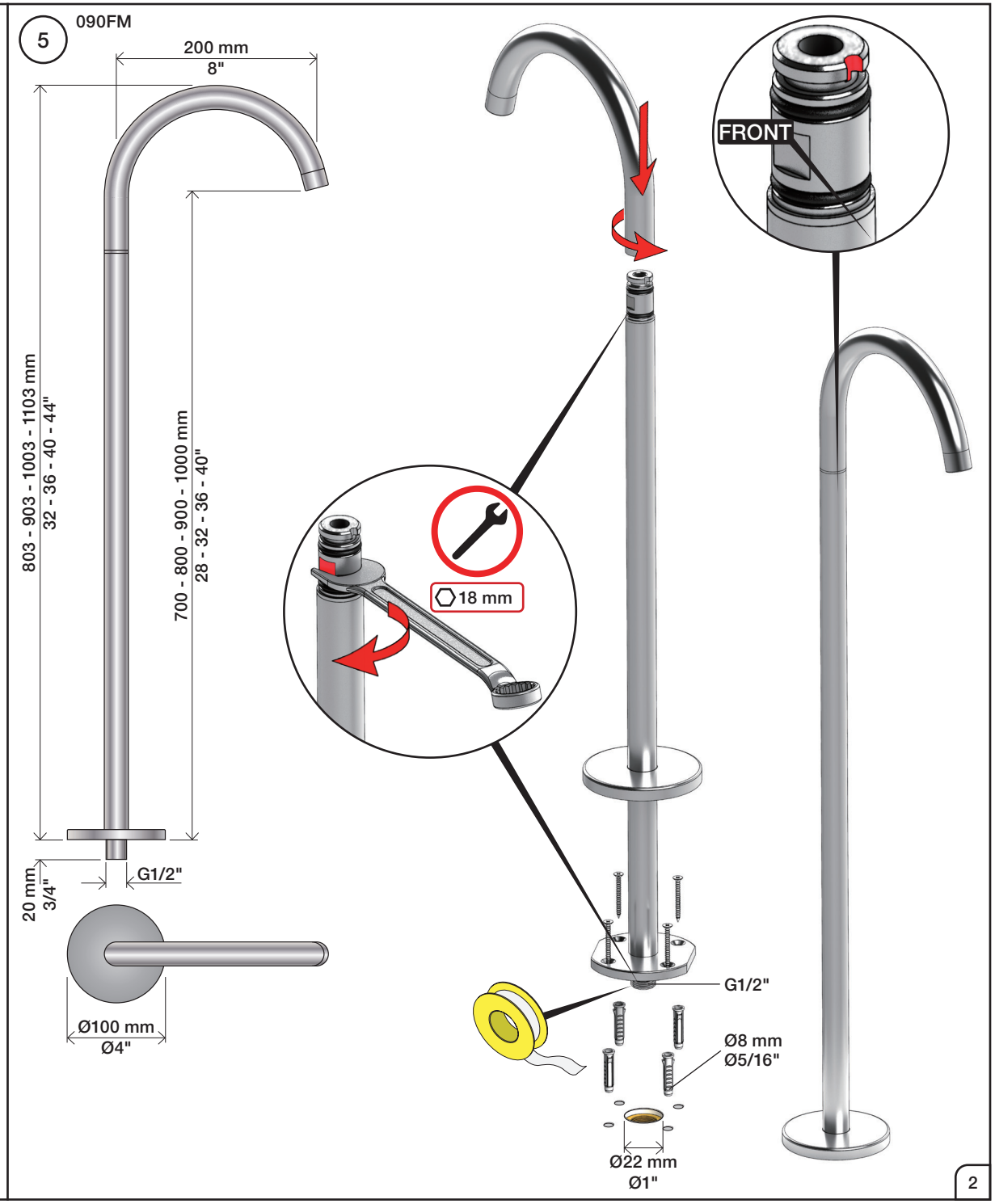

VOLA A/S • Lunavej 2 • DK-8700 Horsens • Tel. +45 7023 5500 • sales@vola.dk • www.vola.com

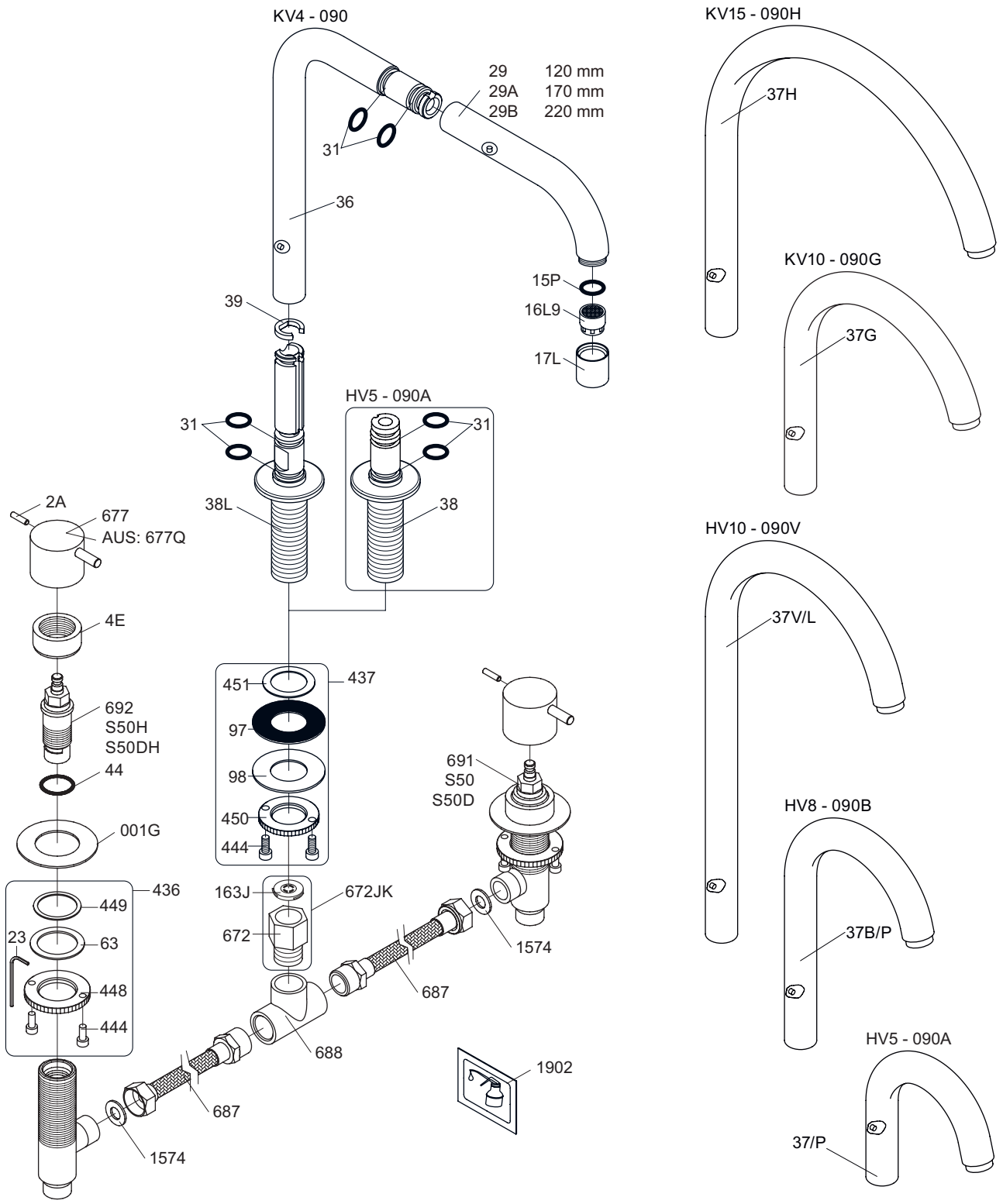

NR.7:	VR2A, VR23, VR677
VR090:	VR15P, VR16L9, VR17L
VR436:	VR63, 2xVR444, VR448, VR449
VR437:	VR97, VR98, 2xVR444, VR450, VR451
VR672JK:	VR163J, VR672
VR691K:	VR23, VR691
VR692K:	VR23, VR692

vola
Lunavej 2
DK-8700 Horsens
Tlf : + 45 7023 5500
sales@vola.com
www.vola.com

VOLA KV4/KV10/KV15
VOLA HV5/HV8/HV10

Date
Apr. 21

Rev.
4

Sheet
SB 27.6

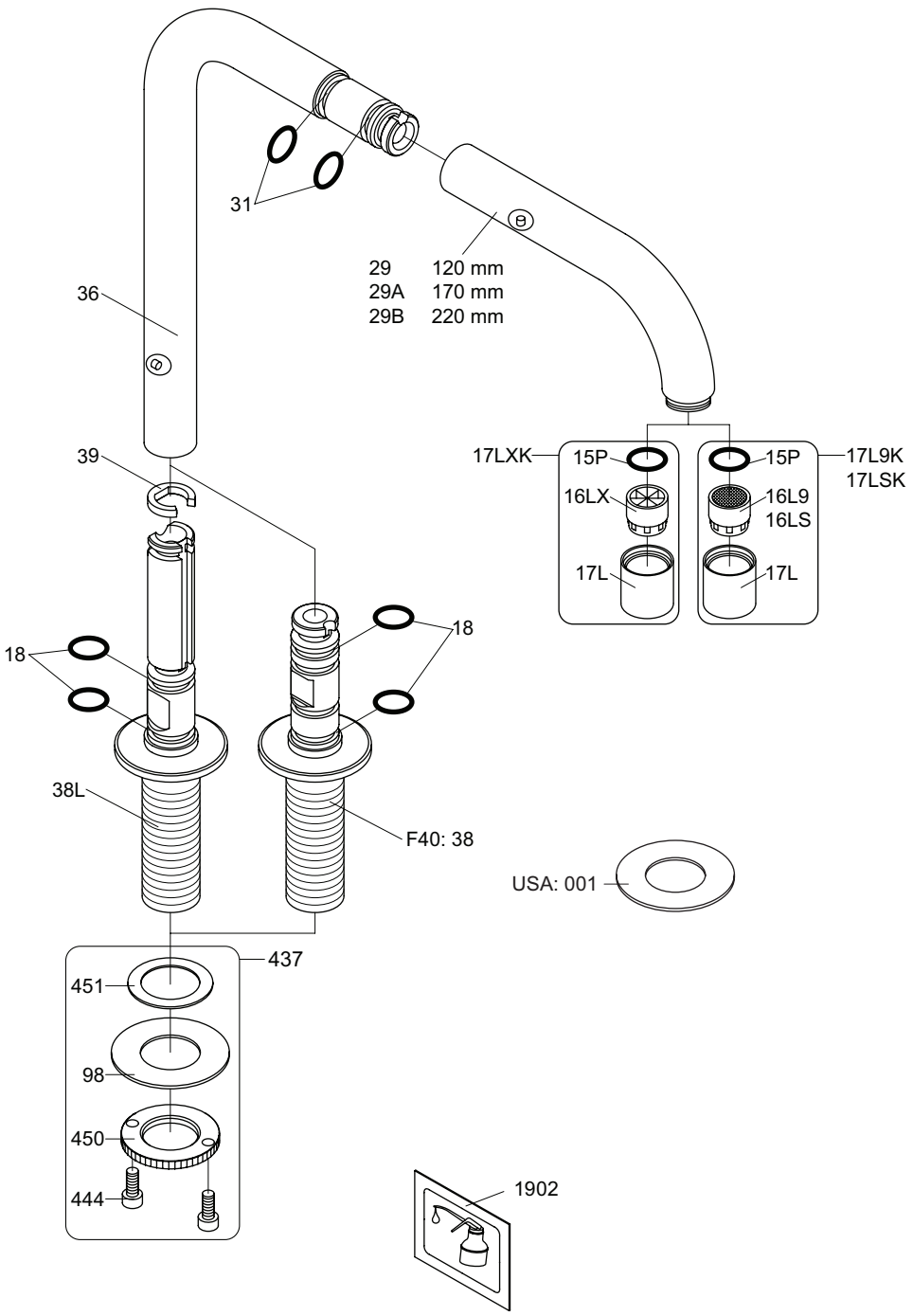

VR17L9K: VR15P, VR16L9, VR17L
VR17LSK: VR15P, VR16LS, VR17L
VR17LXK: VR15P, VR16LX, VR17L
VR090L9: VR15P, VR16L9, VR17L, 2xVR18, 2xVR31, VR1902
VR437: VR98, 2xVR444, VR450, VR451

vola
Lunavej 2
DK-8700 Horsens
Tlf : + 45 7023 5500
sales@vola.com
www.vola.com

VOLA 090

Date
Okt. 16

Rev.
3

Sheet
SB 18

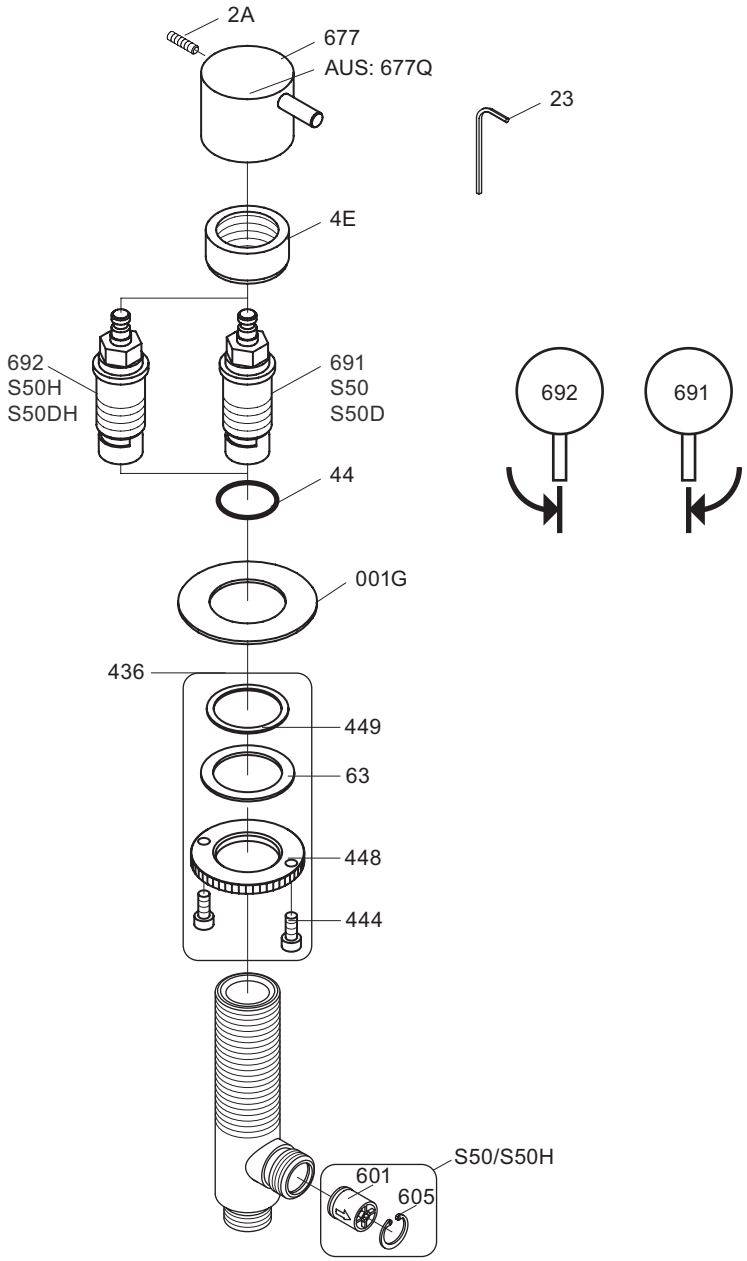

VR691i:	VR23, VR44, VR691
VR692i:	VR23, VR44, VR692
VR436:	VR63, 2xVR444, VR448, VR449
NR.7:	VR2A, VR23, VR677

vola
Lunavej 2
DK-8700 Horsens
Tlf : + 45 7023 5500
sales@vola.com
www.vola.com

VOLA S50/S50H
VOLA S50D/S50DH

Date
Sep. 09

Rev.
2

Sheet
SB 31.3